GIGALIGHT 25Gbps SFP28 hardened active optical cable
P/N: GSS-MDO250-xxxT

Features

- ✓ Suppports SFF8431/SFF8432/SFF8472,I^2C management interface
- ✓ Hot-pluggable SFP28 form factor , supports 25Gbps data rate
- ✓ Maximum link length of 70m on OM3 MMF
- ✓ 850nm VCSEL laser and PIN photo-detector
- ✓ Internal CDR on both Transmitter and Receiver channel
- ✓ Single 3.3V power supply
- ✓ Power dissipation < 1W
- ✓ RoHS compliant
- ✓ Commercial case temperature range: -40℃ to +85℃
- ✓ Hardened active optical cable with metal tube and Kevlar strengthen

Applications

- 25 Gigabit Ethernet
- EDR Infiniband
- High-performance computing clusters
- Servers, switches, storage and host card adapters

Description

Gigalight GSS-MDO250-xxxT SFP28 Hardened Active Optical Cables are direct-attach fiber assemblies with SFP28 connectors. They are suitable for short distances & strengthen application with hardened optical cable, it offers a cost-effective way to connect within racks and across adjacent racks.

Gigalight SFP28 Hardened Active Optical Cables is made of hardened optical cable structure with stainless steel metal tube,Kevlar strenthen and LSZH Jacket ,support up to 70 meters on OM3 MMF,

it's specially for outstanding long term reliability and harsh environment tolerance.

Block Diagram

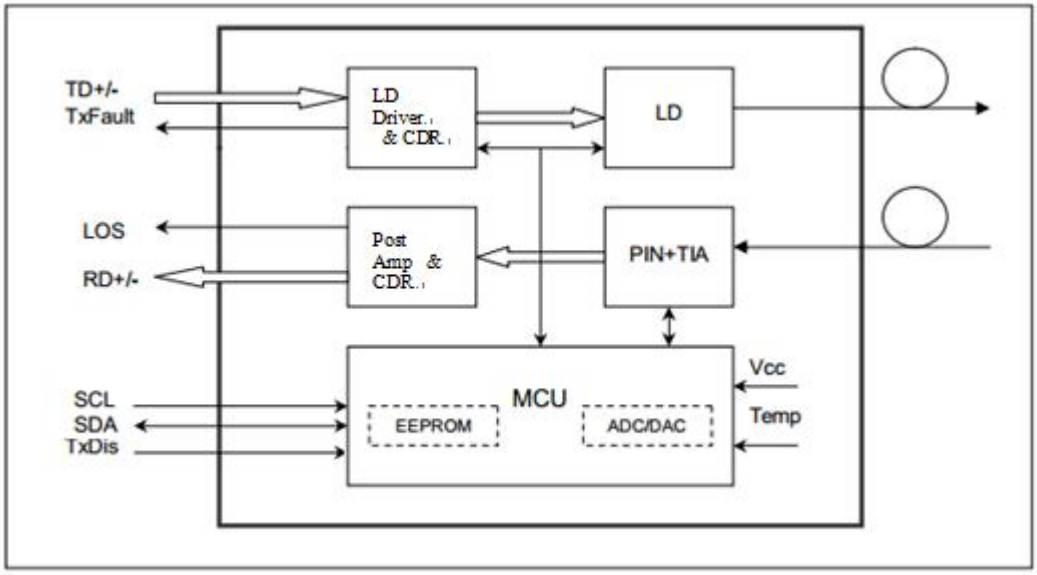

Absolute Maximum Ratings

Table 1 - Absolute Maximum Ratings

Parameter	Symbol	Min	Max	Unit
Supply Voltage	Vcc	0	3.6	V
Storage Temperature	Ts	-20	+85	℃
Operating Case Temperature	C	-40	+85	℃
Operating Humidity	-	5	85	%
Dynamic Bending Radius	Dbr		20D	mm
Static Bending Radius	Sbr		10D	mm

Specifications and Recommended Operating Conditions

Table 2 – Specifications and Recommended Operating Conditions

Parameter	Min	Typical	Max	Unit	Notes
Power supply voltage	3.13	3.3	3.47	V	
Supply current		300		mA	per end typical
Channel Data Rate		25.78		Gbps	
Optical cable outer diameter		3.0		mm	
Optical cable loss			3.5	dB/km	OM3

Tensile 1		300		N	Long Term
Tensile 2		600		N	Short Term
Crush Resistance 1		2000		N/100mm	Long Term
Crush Resistance 1		3000		N/100mm	Short Term

Optical and Electrical Characteristics

Table 3 - Optical and Electrical Characteristics

Parameter		Symbol	Min	Typical	Max	Unit	Notes
Transmitter							
Data rate		BR		25.78		Gbps	
Centre Wavelength		λc	840	850	860	nm	
Spectral Width (-20dB)		σ			0.6	nm	
Average Output Power		Pavg	-8.4		2.4	dBm	
Optical Power OMA		P_{OMA}	-6.4		3	dBm	
Extinction Ratio		ER	2			dB	
Differential data input swing		$V_{IN,PP}$	40		1000	mV	
Input Differential Impedance		Z_{IN}	90	100	110	Ω	
TX Disable	Disable		2.0		Vcc	V	
	Enable		0		0.8	V	
TX Fault	Fault		2.0		Vcc	V	
	Normal		0		0.8	V	
Receiver							
Data rate		BR		25.78		Gbps	
Centre Wavelength		λc	840	850	860	nm	
Receiver Sensitivity (OMA)		Psens	-	-	-10	dBm	
Stressed Sensitivity (OMA)			-	-	-5.2	dBm	
Receiver Power (OMA)					3	dBm	
LOS De-Assert		LOS_D			-13	dBm	
LOS Assert		LOS_A	-30			dBm	
LOS Hysteresis			0.5			dB	
Differential data output		Vout,PP	300		850	mV	

swing						
LOS	High	2.0		Vcc	V	
	Low			0.8	V	

Notes:

Receive Sensitivity measured with a prbs31 pattern @25.78125Gb/s, BER 1E-5.

Timing and Electrical

Table 4 - Timing and Electrical

Parameter	*Symbol*	*Min.*	*Max.*	*Unit*	*Conditions*
Tx_Disable assert time	t_off		100	µs	Rising edge of Tx_Disable to fall of output signal below 10% of nominal
Tx_Disable negate time	t_on		2	ms	Falling edge of Tx_Disable to rise of output signal above 90% of nominal. This only applies in normal operation, not during start up or fault recovery.
Time to initialize 2-wire interface	t_2w_start_up		300	ms	From power on or hot plug after the supply meeting Table 8.
Time to initialize	t_start_up		300	ms	From power supplies meeting Table 8 or hot plug or Tx disable negated during power up, or Tx_Fault recovery, until non-cooled power level I part (or non-cooled power level II part already enabled at power level II for Tx_Fault recovery) is fully operational.
Time to initialize cooled module and time to power up a cooled module to Power Level II	t_start_up_cooled		90	s	From power supplies meeting Table 8 or hot plug, or Tx disable negated during power up or Tx_Fault recovery, until cooled power level I part (or cooled power level II part during fault recovery) is fully operational. Also, from stop bit low-to-high SDA transition enabling Power Level II until cooled module is fully operational
Time to Power Up to Level II	t_power_level2		300	ms	From stop bit low-to-high SDA transition enabling power level II until non-cooled module is fully operational
Time to Power Down from Level II	t_power_down		300	ms	From stop bit low-to-high SDA transition disabling power level II until module is within power level I requirements
Tx_Fault assert	Tx_Fault_on		1	ms	From occurrence of fault to assertion of Tx_Fault
Tx_Fault assert for cooled module	Tx_Fault_on_cooled		50	ms	From occurrence of fault to assertion of Tx_Fault
Tx_Fault Reset	t_reset	10		µs	Time Tx_Disable must be held high to reset Tx_Fault
RS0, RS1 rate select timing for FC	t_RS0_FC, t_RS1_FC		500	µs	From assertion till stable output
RS0, RS1 rate select timing non FC	t_RS0, t_RS1		24	ms	From assertion till stable output
Rx_LOS assert delay	t_los_on		100	µs	From occurrence of loss of signal to assertion of Rx_LOS
Rx_LOS negate delay	t_los_off		100	µs	From occurrence of presence of signal to negation of Rx_LOS

Diagnostics

Table 5 – Diagnostics Specification

Parameter	Range	Unit	Accuracy	Calibration
Temperature	-40 to +85	℃	±3℃	Internal / External
Voltage	3.0 to 3.6	V	±3%	Internal / External
Bias Current	0 to 20	mA	±10%	Internal / External
TX Power	-8 to 3	dBm	±3dB	Internal / External
RX Power	-14 to 0	dBm	±3dB	Internal / External

Digital Diagnostic Memory Map

The transceivers provide serial ID memory contents and diagnostic information about the present operating conditions by the 2-wire serial interface (SCL, SDA).

The diagnostic information with internal calibration or external calibration all are implemented, including received power monitoring, transmitted power monitoring, bias current monitoring, supply voltage monitoring and temperature monitoring.

The digital diagnostic memory map specific data field defines as following.

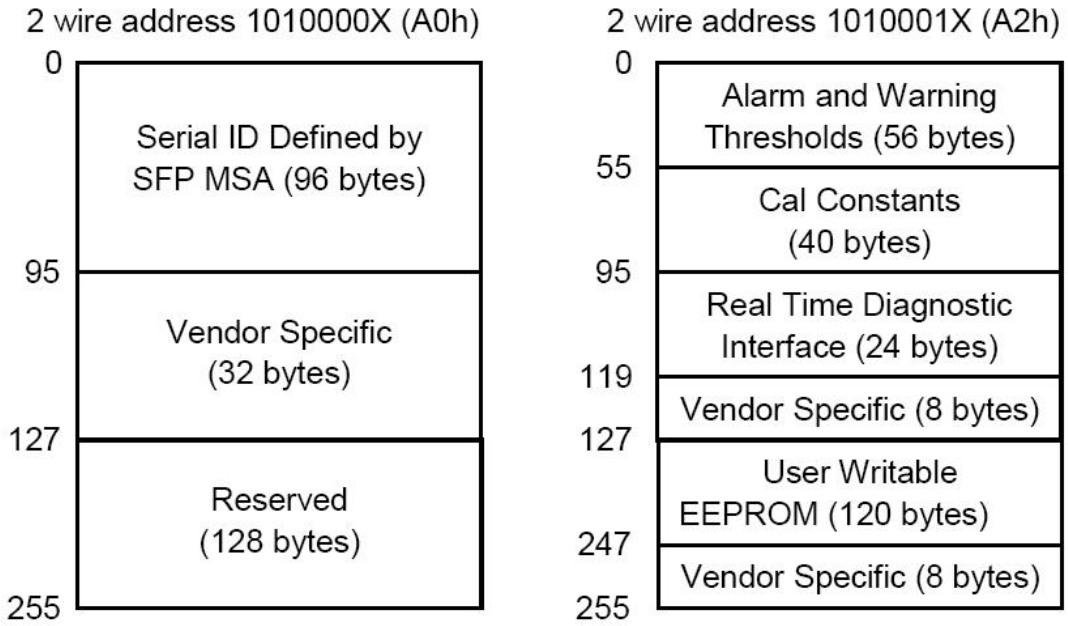

Pin Definitions

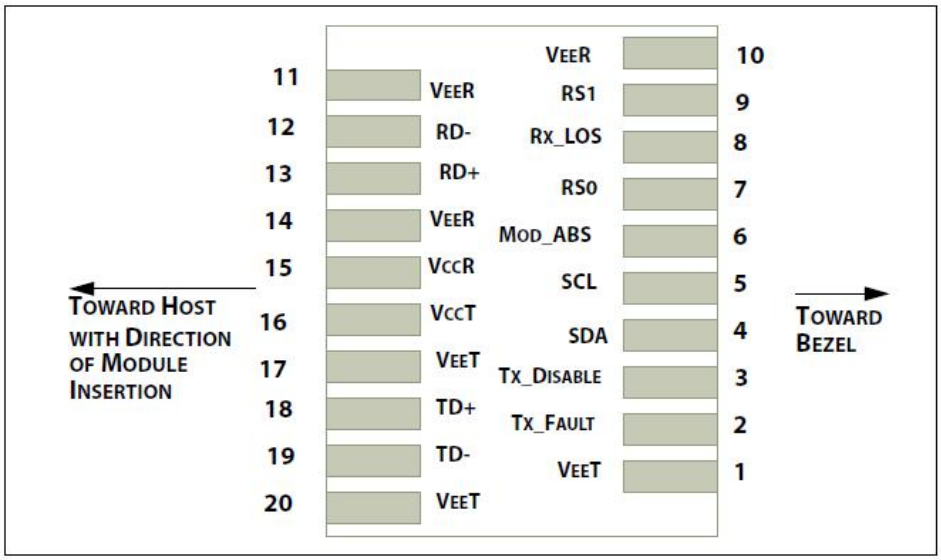

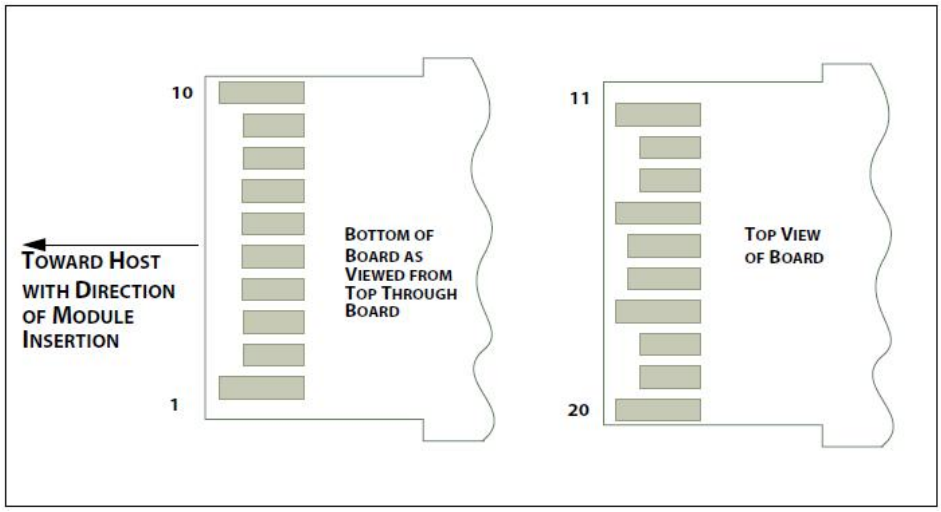

Pin Descriptions

PIN	Logic	Symbol	Name / Description	Note
1		VeeT	Module Transmitter Ground	1
2	LVTTL-O	TX_Fault	Module Transmitter Fault	2
3	LVTTL-I	TX_Dis	Transmitter Disable; Turns off transmitter laser output	
4	LVTTL-I/O	SDA	2-Wire Serial Interface Data Line	2
5	LVTTL-I	SCL	2-Wire Serial Interface Clock	2

6		MOD_ABS	Module Definition, Grounded in the module	
7	LVTTL-I	RS0	Receiver Rate Select	
8	LVTTL-O	RX_LOS	Receiver Loss of Signal Indication Active LOW	
9	LVTTL-I	RS1	Transmitter Rate Select (not used)	
10		VeeR	Module Receiver Ground	1
11		VeeR	Module Receiver Ground	1
12	CML-O	RD-	Receiver Inverted Data Output	
13	CML-O	RD+	Receiver Data Output	
14		VeeR	Module Receiver Ground	1
15		VccR	Module Receiver 3.3 V Supply	
16		VccT	Module Receiver 3.3 V Supply	
17		VeeT	Module Transmitter Ground	1
18	CML-I	TD+	Transmitter Non-Inverted Data Input	
19	CML-I	TD-	Transmitter Inverted Data Input	
20		VeeT	Module Transmitter Ground	1

Notes:

1. Module ground pins GND are isolated from the module case.
2. Shall be pulled up with 4.7K-10Kohms to a voltage between 3.15V and 3.45V on the host board.

Recommended Interface Circuit

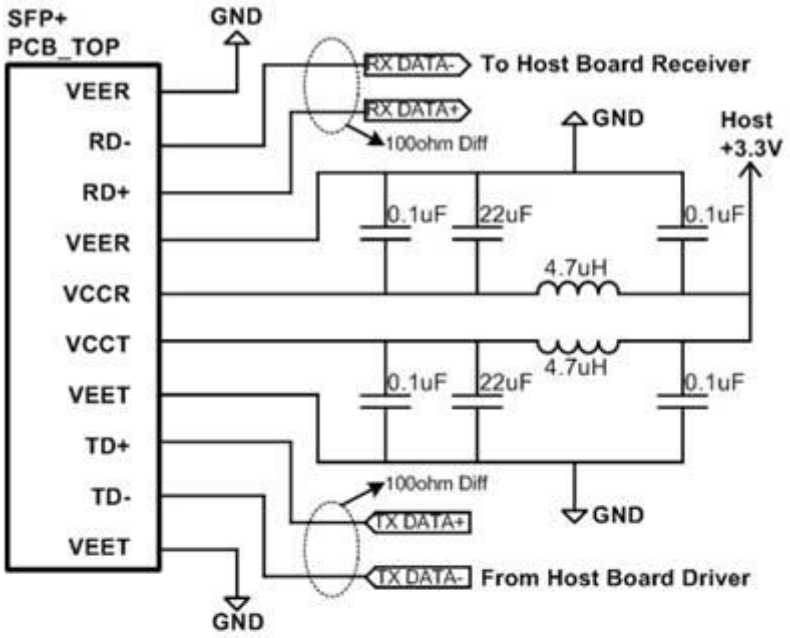

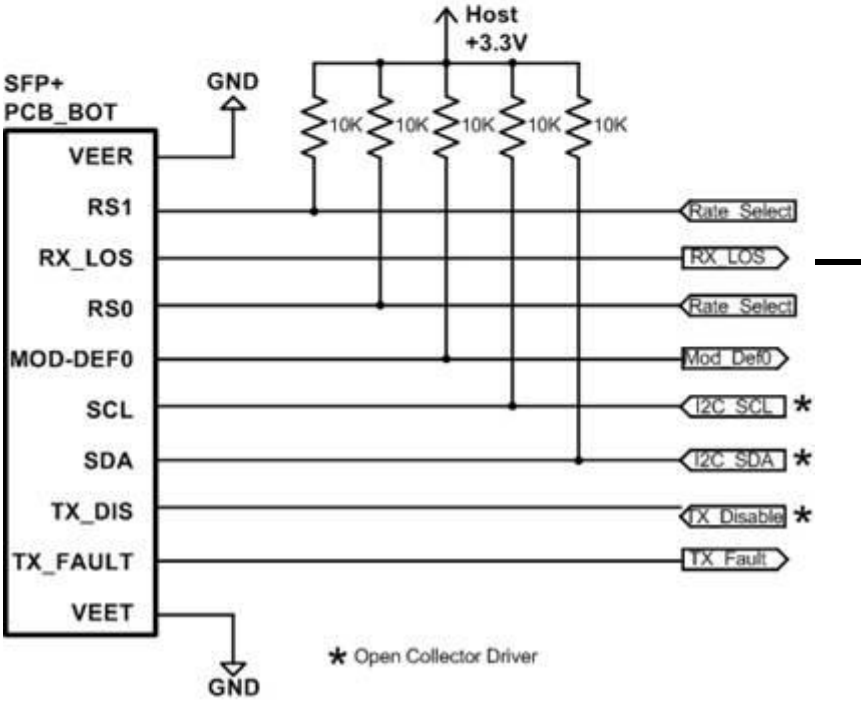

Mechanical Dimensions

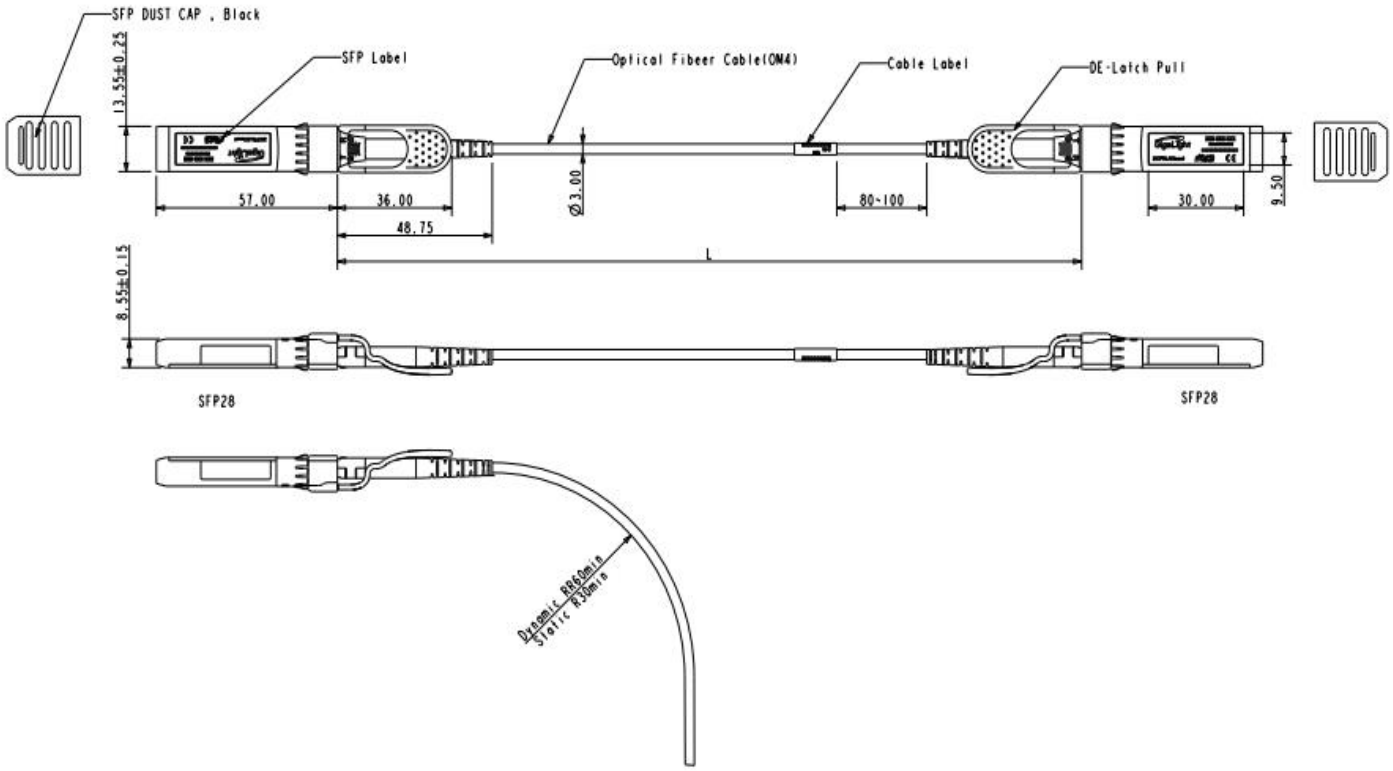

Hardened optical cable Specifications

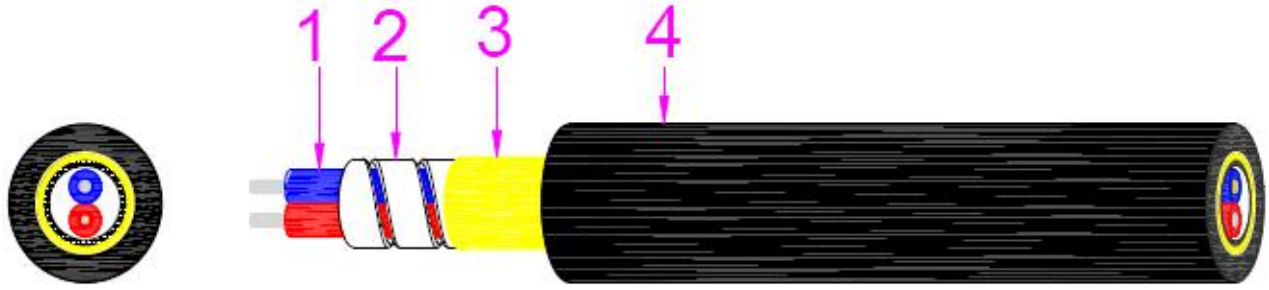

光缆结构 Cable structure		材质/型号 Material /model	规格 Specifications	
1	光纤Optical Fiber	G652D/OM3	2-Φ0.6±0.05	
2	铠管Metal Tube	不锈钢Stainless steel	O.D	Φ1.85±0.1
			I.D	Φ1.35±0.05
			厚度/Thickness	0.22±0.02
3	加强件Strengthen	凯孚拉Kevlar	1100DTEX	
4	披覆Jacket	LSZH	直径Diameter	Φ3.0±0.1
			厚度/Thickness	≥0.4

Regulatory Compliance

Gigalight GSS-MDO250-xxxT Active Optical Cable are Class 1 Laser Products. They meet the requirements of the following standards.

Feature	Standard
Laser Safety	IEC 60825-1:2014 (3rd Edition) IEC 60825-2:2004/AMD2:2010 EN 60825-1-2014 EN 60825-2:2004+A1+A2
Electrical Safety	EN 62368-1: 2014 IEC 62368-1:2014 UL 62368-1:2014
Environmental protection	Directive 2011/65/EU with amendment(EU)2015/863
CE EMC	EN55032：2015 EN55035：2017 EN61000-3-2:2014 EN61000-3-3:2013
FCC	FCC Part 15, Subpart B ANSI C63.4-2014

References

1. SFP MSA
2. 25GBASE-SR
3. Directive 2011/65/EU of the European Parliament and of the Council, “on the restriction of the use of certain hazardous substances in electrical and electronic equipment,” July 1, 2011.

Ordering information

Part Number	Product Description
GSS-MDO250-xxxT	25Gbps, 850nm; SFP28 Hardened AOC with metal tube and Kevlar strengthen,OM3 fiber, -40℃ ~ +85℃
xxx :001~070, Length in meters on OM3 MMF	
The optical fiber structure can be customized, further details are available from any Gigalight sales representative.	

⚠CAUTION:

Use of controls or adjustment or performance of procedures other than those specified herein may result in hazardous radiation exposure.

Important Notice

Performance figures, data and any illustrative material provided in this data sheet are typical and must be specifically confirmed in writing by Gigalight before they become applicable to any particular order or contract. In accordance with the Gigalight policy of continuous improvement specifications may change without notice.

The publication of information in this data sheet does not imply freedom from patent or other protective rights of Gigalight or others. Further details are available from any Gigalight sales representative.

E-mail: sales@gigalight.com
Official Site: www.gigalight.com

Revision History

Revision	Date	Description
V0	Feb-28- 2022	Advance Release.